The Solving of Bias Resistor and Its Effect on the RS485 Fieldbus

Liang Zhao, Ruobing Liang, and Jili Zhang

***Abstract*—The RS485 fieldbus has been widely used in communication, data collecting and related fields. The stable communication is the premise of its application. Maximum load, terminal resistor and bias resistor are three main parameters of RS485 field bus, which directly influence the stable of system. This paper adopts the current flow method to solve the theoretical value of bias resistor based on the equivalent circuit model of RS485 field bus, and further analyzes the influence on the maximum load and terminal resistor. The research result offers a theoretical basis for the application of RS485 filed bus and is very useful in many applications.**

***Index Terms*—Fieldbus, RS485, bias resistor, terminal resistor.**

I. Introduction

The RS485 fieldbus uses balanced differential signals data transmission protocol, which enables the configuration of inexpensive local networks and multipoint communications links. RS485 fieldbus has been widely used in almost every domain about information and control systems, by its special advantage of multiple nodes, high ability of anti-interference and fits for data long distance.

Typically, data collection and monitoring system is the most widely used of RS485 fieldbus. A low cost data acquisition system was introduced in [1], which was based on the RS485 standard interfaces. Li *et al.* designed a new type of industrial data acquisition monitoring system based on single chip computer, which collects long-distance data of industrial field to the industrial PC for data acquisition and control through the RS485 serial communication [2]. RS485 is also used in building automation as the simple bus wiring and long cable length is ideal for joining remote devices [3], [4]. In paper [5], the RS485 bus was used to monitor the distributed navigation light fault, on the other hand, it is used to control the modules in the integrated with a small-sized strap-down inertial navigation system (INS) [6]. Besides that, RS485 fieldbus is also used in Environmental monitoring field [7-8] and instrument and meter [9].

Although many applications use RS485 signal levels, the speed, format, and protocol of the data transmission is not specified by RS485 protocol. Besides that, there are also a lot of instable factors in RS485 [10]. However, there are few research papers on involving how to improve the stability of bus. According to existed literature, the focus of research about RS485 fieldbus is only on the aspect of communication protocol, paper[11] implemented a method to high speed data communications protocol, the researchers tested the protocol of Modbus TCP in order to realize the communication between RS485 fieldbus and Ethernet [12]. IML Group put a lot of effort in order to decrease the bit error rate in long RS485 communication situations [13].

In all of instable factors, failsafe operation is one of most frequent problem encountered in RS485 communication systems, which, happens especially when the valid input signal is lost. This paper presents how to apply failsafe biasing for idle buses externally, gives the theoretical solving of bias resistor and further analyzes the effect on the value of maximum load and terminal resistor, which are the other two main parameters directly influence the stable of system in designing of RS485 field bus.

II. Failsafe of RS485

RS485 specifies that the threshold voltage of receiver output is ±200mV, that is to say, the out state is logic high when differential input voltages of VAB⩾200mV, and vice versa. However, the receiver's output state is not defined when the input voltage is in between -200mV and 200mV, namely, either high or low. This happens especially when the valid input signal is lost. There are three possible scenarios that can cause the failsafe of bus:

1) Open circuit, which is caused by wire break or the unintentional disconnection of a transceiver from the bus;

2) Short circuit, by connecting both conductors of a differential pair to one another;

3) An idle bus when none of the bus transceivers are active.

The 1) and 2) situation are belonged to wrong wiring when the RS485 fieldbus is decorated, which can be eliminated by going through every step of wiring carefully. The 3) condition is not a fault but occurs regularly when bus control is handed over from one driver to another to avoid bus contention.

Fig. 1 shows the sequence of RS485 communication, which indicates that the start of a data frame is from logic low to logic high. It can be easily mistaken for a beginning of a data transfer if the out state is always at logic low level, however, there is no data on the bus to be transferred, and it will not produce a stop bit for this process, which led to a network paralysis.

Manuscript received August 8, 2013, revised November 15, 2013. This work was supported in part by China Postdoctoral Science Foundation Funded (Grant No.2013M540227); the National Natural Science Foundation of China (Grant No. 51008042, No.51078053) and the Key Projects in the National Science & Technology Program in the Twelfth Five-year Plan Period of China (Grant No.2011BAJ03B12-3).

The authors are with the Faculty of Infrastructure Engineering, Dalian University of Technology, China. (e-mail:zliangdut@qq.com, rbliang1984@126.com, zjldlut@dlut.edu.cn).

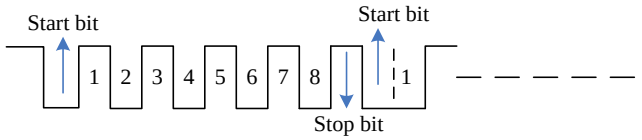

Fig. 1. The timing diagram of RS485 communication

For this situation, it is necessary to provide external resistor biasing to ensure failsafe operation during an idle bus and remove the uncertainty of random output states.

III. RS485 Network Model

To force the receiver outputs into a defined state, two biasing resistors, R_B, are introduced in RS485 bus, as shown in Fig. 2, one is pulled-up to V_s, and the other is pulled-down to GND. R_{T1} and R_{T2} are the two terminating resistors, which are located at the end of network.

In order to calculate the value of these resistors, the equivalent circuit model can be described as in Fig. 3, which uses R_{In}, to represent the common-mode input resistance of all transceivers connected to the bus lumped together.

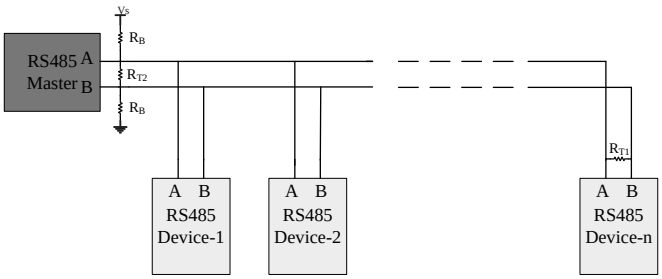

Fig. 2. RS485 network with biasing resistors and terminal resistors

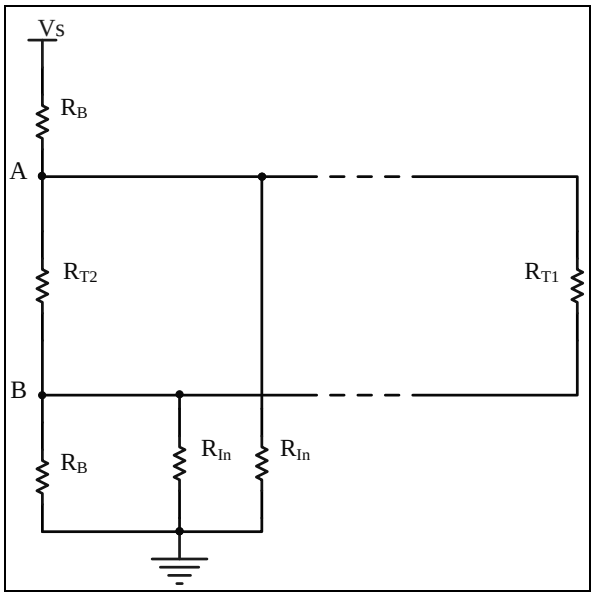

Fig. 3. Equivalent circuit of RS485 network

IV. Theoretical Solution

A. Minimum Value of Biasing Resistor

The solving method of biasing resistor is based on the Kirchhoff's current law (KCL), the current that flows into one node equals the current flows out it. Establish the current flowing diagrams for node A and B based on the KCL, respectively, which are as shown in Fig. 4 (a) and Fig. 4 (b), the solid line presents the current flows into node A, and dotted line shows the current flows from node A, the same as to node B.

Set up KCL equations according to Fig. 4 (a) and Fig. 4 (b) as follows.

Current equation of node A:

$$\frac{V_S - V_A}{R_B} = \frac{V_A - V_B}{R_{T2}} + \frac{V_A - V_B}{R_{T1}} + \frac{V_A}{R_{In}} \tag{1}$$

Current equation of node B:

$$\frac{V_A - V_B}{R_{T2}} + \frac{V_A - V_B}{R_{T1}} = \frac{V_B}{R_{In}} + \frac{V_B}{R_B} \tag{2}$$

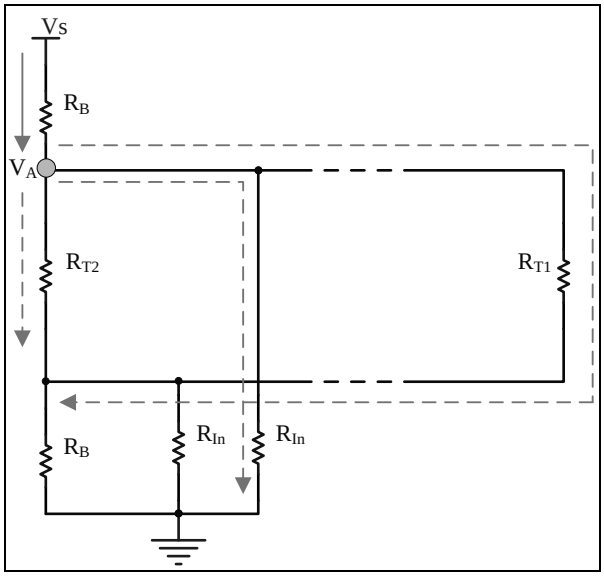

(a) Current of node A

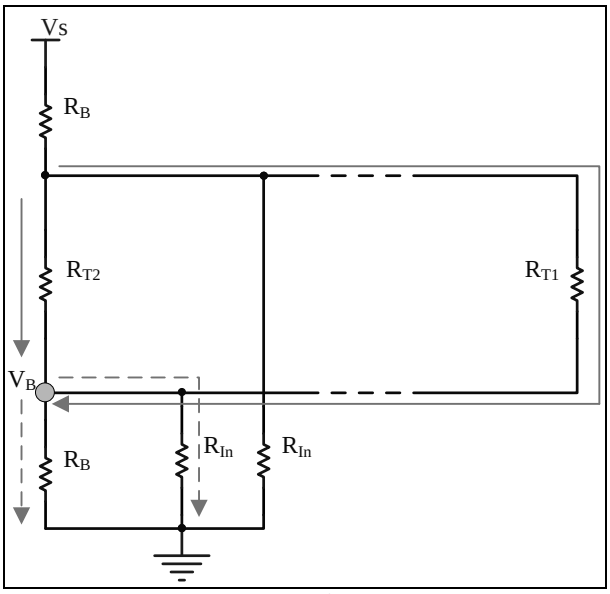

(b) Current of node B

Fig. 4. Current flows of network with biasing resistors and terminal resistors

The respective line voltages V_A and V_B can be deduced from Equation (1) and Equation (2), as follows:

$$V_A = R_{In}\left[\frac{V_S - V_A}{R_B} - (V_A - V_B)\left(\frac{1}{R_{T1}} + \frac{1}{R_{T2}}\right)\right] \quad (3)$$

$$V_B = R_{In}\left[(V_A - V_B)\left(\frac{1}{R_{T1}} + \frac{1}{R_{T2}}\right) - \frac{V_B}{R_B}\right] \quad (4)$$

The differential input voltage V_{AB} is described as Equation (5), through Equation (3) subtracting Equation (4).

$$V_{AB} = V_A - V_B = R_{In}\left[\frac{V_S - V_{AB}}{R_B} - 2V_{AB}\left(\frac{1}{R_{T1}} + \frac{1}{R_{T2}}\right)\right] \quad (5)$$

We can recast this Equation (5) as shown in Equation (6).

$$V_{AB} = \frac{V_S}{R_B} \times \frac{1}{2\left(\frac{1}{R_{T1}} + \frac{1}{R_{T2}}\right) + \frac{1}{R_{In}} + \frac{1}{R_B}} \quad (6)$$

The solving of R_B is subject to a series of conditions based on the principle of RS485 communication standard.

1) Input resistor

As we know, the RS485 specifies the maximum load number is 32, when the input resistor is 12kΩ, and then the minimum common-mode resistor R_{CM} = 375Ω. The biasing resistors connect to both A and B lines, which presents a common-mode load to the bus. In addition, the parallel combination of R_B and R_{In} should be no less than 375Ω, which is expressed as:

$$R_B \| R_{In} \geq R_{CM} \quad (7)$$

2) Terminal resistor

The value of terminal resistor R_{T1} should be equal to the other terminal resistor R_{T2} when there is without the biasing resistors, and value matches the line impedance, typically value is 120Ω. According to this situation, the value of R_{T2} should equal to 120Ω, and the parallel combination of R_{T1} and 2 R_B should equal to the line impedance, shown as in Fig. 3. Thus, the R_{T2} satisfies:

$$\frac{1}{R_{T2}} = \frac{1}{120} - \frac{1}{2R_B} \quad (8)$$

3) Noise voltage

Assume that the supply voltage is 5V, with ±5% tolerance, namely, the V_S=4.75v. Generally speaking, the worst differential voltage is less than 50mv, for a well-balance power system, and then we can assume that the input differential input voltage is as Equation (9).

$$V_{AB} = V_{IT} + V_N = 200\text{mV} + 50\text{mV} = 250\text{mV} \quad (9)$$

Take Equations (7), (8), (9) into Equation (6) and solve it, the theoretical value of R_B is 556Ω. Here, we choose the nearest neighbor resistor, 549 Ω for application usage.

$$0.25 = \frac{4.75}{R_B} \times \frac{1}{2\times\left(\frac{1}{120} + \frac{1}{120} - \frac{1}{2R_B}\right) + \frac{1}{375}} \quad (10)$$

B. Effect to the Bus

The value of terminal resistor changes after adding biasing resistor, it is can be calculated by Equation 8 as follows.

$$R_{T2} = \frac{1}{\frac{1}{120\Omega} - \frac{1}{2R_B}} = \frac{1}{\frac{1}{120\Omega} - \frac{1}{2\times 549\Omega}} = 134\Omega \quad (11)$$

where, the value of biasing resistor selected is 549Ω.

Besides that, the value equivalent input resistor R_{In} varies too, which should satisfies the inequality Equation (7), and the value is decreasing, with its minimum value is:

$$R_{In} = \frac{1}{\frac{1}{R_{CM}} - \frac{1}{R_B}} = \frac{1}{\frac{1}{375\Omega} - \frac{1}{549\Omega}} = 1.18\text{k}\Omega \quad (12)$$

The change of R_{In} directly affects the maximum load on the bus. As the standard points out that the maximum load of RS485 is 32, when the input resistor is 12kΩ. Hence, The maximum number of transceivers, N_{max} , is determined by dividing the rated number of unit loads by the value of R_{In}, which can be expressed as:

$$N_{max} = 32 \times \frac{375\Omega}{1.18\text{k}\Omega} = 10 \quad (13)$$

Therefore, the corresponding n_{max} load for 1/2UL, 1/4UL, 1/8UL changes from 64 to 20, 128 to 40, 256 to 80, respectively.

C. Maximum Value of Biasing Resistor

The value of biasing resistor solved by this method is a minimum refer to the inequality Equation (7). There must exit an upper bound for it, in case the current flow of RS485 bus is too small to drive load.

The purpose of adding biasing resistor is to pull-up the differential voltage higher than threshold voltage 200mV, and the minimum biasing current can be expressed as:

$$I = \frac{200mv}{R_{Diff}} \quad (14)$$

where R_{Diff} is the differential input resistor, which should equal to parallel combination of equivalent addition resistor, which is made up of biasing resistors and terminal resistors and equivalent input resistor, which is related to the number of load.

The expression of R_{Diff} is as follows:

$$R_{Diff} = 60 \times \frac{12\text{k}\Omega}{N} \tag{15}$$

where, N is the number of load on the RS485 bus. Under these conditions, the maximum resistor can be determined to corresponding minimum current. The expression of maximum resistor can be given as Equation 16 based on Ohm's law.

$$R_{\max} = \frac{5v}{I} = \frac{5v}{200mv} 60 \times \frac{12k\Omega}{N} \tag{16}$$

In addition, the maximum value of biasing resistor can be calculated as:

$$R_{B\max} = \frac{R_{\max} - R_{Diff}}{2} \tag{17}$$

where, R_{Diff} and $R_{\max}$ are both related to the number of load on the RS485 bus, Fig. 5 shows the linear relationship between maximum value of biasing resistor and the number of load on the bus corresponding to the UL, 1/2UL, 1/4UL and 1/8UL respectively. The users can choose a suitable value for biasing resistor based on the minimum 549Ω and Fig. 5.

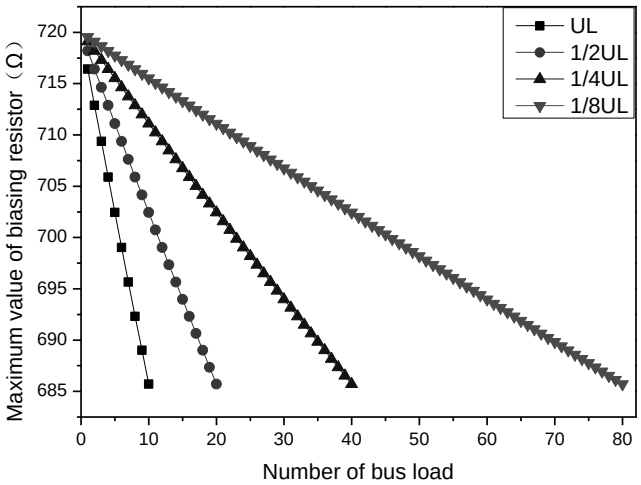

Fig. 5. Maximum value of biasing resistors

V. Conclusion

The biasing resistor adding on the RS485 A and B line can enhance stability of the communication, avoiding the failsafe situation, especially for the an idle bus when none of the bus transceivers are active. This paper established the equivalent RS485 network model, and solved out the theoretical minimum value of biasing resistor based on the principle of KCL, the effect to terminal and maximum load of the bus are also analyzed in detail after adding the biasing resistor. Finally, by using the limited current on the bus gives the maximum value of biasing resistor corresponding to the UL, 1/2UL, 1/4UL and 1/8UL respectively. The results of this paper can be used in designing of RS485 fieldbus application directly.

Appendix

V_A	Voltage of line A
V_B	Voltage of line B
V_{AB}	Differential voltage of line A and line B
V_S	Power supply for RS485 bus
V_{IT}	Threshold voltage of high-level
V_N	Noise voltage on the RS485 bus
R_B	Biasing resistor
R_{T1}	Terminal resistor in far-end
R_{T2}	Terminal resistor in near-end
R_{In}	Equivalent input resistor of bus
R_{CM}	Common-mode resistor
R_{Diff}	Equivalent differential input resistor
$N_{\max}$	Number of maximum load on the bus

Acknowledgment

This work was supported by China Postdoctoral Science Foundation Funded (Grant No.2013M540227); the National Natural Science Foundation of China (Grant No. 51008042, No. 51078053); the Key Projects in the National Science & Technology Program in the Twelfth Five-year Plan Period of China (Grant No.2011BAJ03B12-3); the Fundamental Research Funds for the Central Universities of China (No.DUT11ZD105).

References

[1] A. Mota, J. A. Fonseca, and F. Santos. "Low cost data acquisition systems based on standard interfaces," in *Proc. IEEE International Conference on Electronics, Circuits and Systems*, pp. 433-437, 7-10 Sept. 1998.

[2] Y. M. Li, J. Rong, and S. Huang. "Technology study of new industry data collection and monitoring system," in *Proc. Conference on Electronic and Mechanical Engineering and Information Technology*, pp. 4709-4712, 12-14 Aug. 2011.

[3] A. Jorge, J. Guerreiro, P. Pereira, J. Martins, and L. Gomes, "Energy Consumption Monitoring System for Large Complexes," in *Proc. Conference on Computing Electrical and Industrial Systems*, vol. 314, pp. 419-426, 2010.

[4] L. Zhao, J. L. Zhang, and R. B. Liang. "Development of an energy monitoring system for large public buildings," *Energy and Buildings*, vol. 66, pp. 41-48, Nov. 2013.

[5] Y. Tan, Ch. X, X. F. Zhang, Q. Li, and Y. He. "Design on distributed fault monitoring system for navigation lights," *Information Technology Applications in Industry*, vol. 263-266, pp. 569-573, Dec. 2013.

[6] D. A. Antonov, K. K. Veremeenko, M. V. Zharkov, and R. Zimin. "Experimental automobile integrated navigation module," *IEEE Aerospace and Electronic Systems Magazine*, vol. 23, no. 12, pp. 20-23, Dec. 2008.

[7] J. H. He, "Developing environment of hierarchical and distributed real-time fire-control network," *Journal of Systems Engineering and Electronics*, vol. 9, pp. 1-7, 1998.

[8] Y. L. Jin, J. Q. Yang. "Design an intelligent environment control system for Green House based on RS485 bus," in *Proc. 2nd International Conference on Digital Manufacturing and Automation*, pp. 361-364, 5-7 Aug. 2011.

[9] T. Nobes. "Smart instruments and fieldbus," *Nuclear Engineer*, vol. 42, pp. 59-66, Mar. 2001.

[10] V. Ajay Kumar. "Overcoming Data Corruption in RS485 Communication," in *Proc. Conference on Electromagnetic Interference and Compatibility*, pp. 9-12, 6-8, Dec. 1995.

[11] L. Z. Geng, P. Wang, Ch. Ma, and H. Jia, "Design and implement of RS485 high speed data communications protocol," *Journal of Tsinghua University*, vol. 48, pp. 1311-1314, 2008 (in Chinese).

[12] E. Joelianto, Hosana. "Performance of an industrial data communication protocol on Ethernet network," in *Proc. 5th IFIP International Conference on Wireless and Optical Communications Networks*, pp. 1-5, 5-7, May 2008.

[13] IML Group plc, "Achieving error-free transmission on long RS485 lines," *Electronic Product Design*, vol. 16, pp. 33-38, Dec. 1995.

Liang Zhao received the B.S. and M.S. degrees in Dalian University of Technology (DLUT), Dalian, China, in 2007 and 2009, respectively. Now he is a Ph.D. Candidate of Dalian University of Technology (DLUT). He has extensive programming experience in C++ and Assembly. He also specializes in designing embedded systems (ARM, Freescale, Microchip and Intel), large-scale distributed systems, network security, machine learning and intelligent control. His research interests include internet of building energy system, network communication, embedded system, and intelligent control.

Jili Zhang received his Ph.D. degree in Harbin Jianzhu University, Harbin, China, in 1999. Now, he is a professor in the Faculty of Infrastructure Engineering, Dalian University of Technology. His research interests include internet of building energy system, building energy efficiency and intelligent control.

Ruobing Liang received her Ph.D. degree in Dalian University of Technology (DLUT), Dalian, in 2012. Her major field of study include internet of building energy system and intelligent control.