Peak-to-Average Power Ratio Reduction using Artificial Bee Colony Algorithm in Wavelet Packet Modulation

Necmi Taşpınar and Mahmut Yıldırım

***Abstract*—Wavelet packet modulation (WPM) is used as an alternative to orthogonal frequency division multiplexing (OFDM) as multicarrier modulation (MCM) technique, recently. High peak-to-average power ratio (PAPR) value of the MCM signals decreases the systems performance due to using nonlinear amplifier in the system transmitter. Generally, partial transmit sequence (PTS) technique is used to reduce PAPR in MCM systems. In this paper, we use the artificial bee colony (ABC) algorithm to reduce the PAPR value of the PTS for WPM signals. The performance of the artificial bee colony algorithm for 6th Daubechies wavelets was compared with the original WPM for different Daubechies wavelets, random search PTS for 6th Daubechies wavelets and optimum PTS by computer simulations.**

***Index Terms*—Artificial bee colony (ABC) algorithm, partial transmit sequence (PTS), peak-to-average power ratio (PAPR), wavelet packet modulation.**

I. Introduction

A multicarrier modulation based on wavelet packet transform is called wavelet packet modulation (WPM) [1]-[4]. WPM supplies both the time and the frequency resolution for the transmission signals. In other words, WPM subchannels can have different bandwidths and symbol rates, contrarily OFDM subchannels which have equal bandwidths. Bandwidths and symbol rates of the WPM subchannels can be optimized according to the system requirements. WPM signals can have less peak-to-average power ratio (PAPR) values than OFDM signals. Moreover, the major advantage of WPM is its flexibility. This feature makes it eminently suitable for future generation of communication systems. With the ever-increasing need for enhanced performance, communication systems can no longer be designed for average performance while assuming channel conditions. Instead, new generation systems have to be designed to conditions. This situation has led to the study of flexiable and reconfigurable systems capable of optimizing performance according to the current channel response.

Although, MCM has many advantages its main drawback is the high PAPR derived from using high power amplifier (HPA) in the transmitter. In order to reduce high PAPR, a lot of techniques such as clipping ,coding, selected mapping (SLM), partial transmit sequences (PTS), tone injection (TI), tone reservation (TR) and active constellation extension (ACE) are used [5]-[16]. PTS is the most studied method for PAPR reduction because it has a strong PAPR reduction performance. In the literature, there are some studies using artificial optimization methods as genetic algorithm (GA), simulating annealing, differential evolution (DE), particle swarm optimization (PSO), parallel tabu search and artificial bee colony (ABC) algorithm to reduce high peak-to-average power ratio (PAPR) value of the multicarrier modulation techniques such as OFDM and MC-CDMA [17]-[23].

In this paper, we use the artificial bee colony (ABC) algorithm to reduce the PAPR value of the PTS for WPM signals. The ABC algorithm [24]-[27] is an intelligent swarm optimization algorithm based on intelligent foraging behaviour of a honey bee swarm. In the (ABC-PTS) scheme, each food source equals a phase factor vector and honey bees goal to find the optimum food source which gives the maximum PAPR reduction performance.

The paper is organised as follows: In Section II, the wavelet packet modulation (WPC) and PAPR of the WPC signals are described. In Section III, PTS for PAPR reduction is introduced. In Section IV, ABC algorithm for PTS is given. In Section V, the simulation results are presented. In Section VI, conclusions are given.

II. Sistem Model

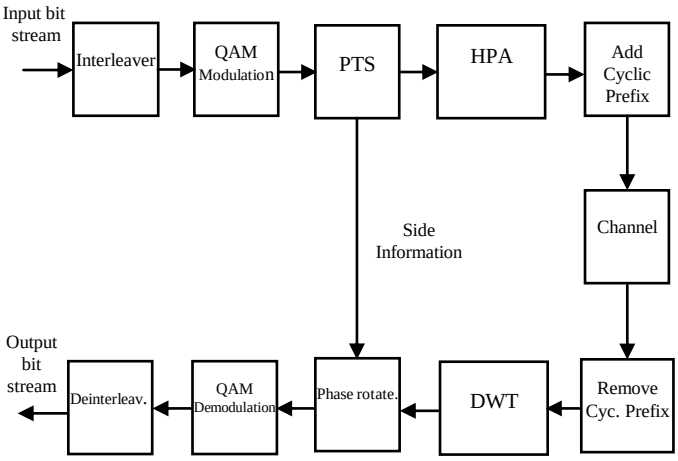

Fig. 1. Block diagram of the system model.

The system model used for the simulations is given in Fig. 1. It is seen from this figure, user bits are interleaved to avoid from the burst errors in the communication channel and the signal is modulated with QAM. Then partial transmit sequence (PTS) is used to reduce high peak-to-average power ratio (PAPR) value of the signal. Side information is sent to

Manuscript received March 25, 2013; revised May 20, 2013. This study is supported by Erciyes University Scientific Research Projects Coordination Unit (Project No: FBD-12-4100).

Necmi Taşpınar and Mahmut Yıldırım are with the Department of Electrical and Electronics Engineering, Erciyes University, Kayseri, Turkey (e-mail: taspinar @ erciyes. edu.tr, mahmut.yildirim @ bozok.edu.tr).

the receiver to obtain the original WPM signal. The signal is amplified by the high power amplifier (HPA). Then cycle prefix is added to the signal to avoid from intersymbol interference (ISI). At the receiver, the extraction of cyclic prefix is performed and then discrete wavelet transformation (DWT) is taken. Phase rotation is made to obtain phase of the original WPM signal with the aid of the side information and then the signal is demodulated. Deinterleaver carries each QAM symbol to the original place in the bit stream [1].

A. Wavelet Packet Modulation

Wavelet Packet Modulation (WPM) is realized by the use of the inverse discrete wavelet transformation (IDWT) at the transmitter and discrete wavelet transformation (DWT) at the receiver, similar to the IFFT and the FFT in OFDM systems. In wavelet theory, wavelet function is represented by high-pass filter with impulse responses h[m] and scaling function is represented by low-pass filter with impulse responses g[m]. Discrete time filters are used to realize the wavelet transformation. The subcarriers of the WPM system are derived via a wavelet packet transform (WPT). The coefficients of wavelet packet filter banks are computed with an algorithm that performs iterations of two channel filter bank decomposition or reconstruction. Wavelet packets are given as follows [2]:

$$\psi_{k+1,\,2p-1}[m]=\sqrt{2}\sum_{m'}h[m']\psi_{k,p}[m-2^k m'] \tag{1}$$

$$\psi_{k+1,\,2p}[m]=\sqrt{2}\sum_{m'}g[m']\psi_{k,p}[m-2^k m'] \tag{2}$$

where $\psi_{k,p}$ [m] denotes p^{th} wavelet packet function at the kth level. In wavelet packet modulation, the number of iteration determines the number of subcarriers with $N=2^{ni}$ where ni denotes the number of iterations. By the aid of inverse discrete wavelet packet transformation (IDWPT), two signals are sampled and filtered by HPF and LPF. By adding the outputs of HPF and LPF filters, the transmitted signal for WPM is obtained as [2]

$$S_{WPM}(m)=\sum_{p=0}^{N-1}\sum_{l=0}^{\infty}a_p(l)\,\psi_{k,p}^{syn}(m-lN) \tag{3}$$

where a_p(l) are complex data symbols of different paralel streams p, $\psi_{k,p}^{syn}$ denotes synthesis wavelet packet function for the pth sub channel.

In the receiver, the discrete wavelet packet transformation (DWPT) is realised to bring the signals back to their original domain. In an iteration of DWPT, the input signal is filtered by HPF and LPF, decomposing original signal into two parts. Each of the decomposed parts is then down sampled by two satisfying the Nyquist rule [2].

B. PAPR of the WPM Signal

The PAPR of the tranmitted signal $x(t)$ is defined as the ratio of the peak power $(P_{peak}=\max\{|x(t)|^2\})$ over the average power $(P_{ave}=E\{|x(t)|^2\})$. In digital implementations of communications transceivers, rather than using the continuous time signal $x(t)$ in PAPR computation, we instead work with $x[n]$, the discrete time samples of $x(t)$, provided that an oversampling factor of at least 4 is used. PAPR is expressed as:

$$PAPR=\frac{\max\{|x(n)|^2\}}{E\{|x(n)|^2\}} \tag{4}$$

where $E\{.\}$ denotes ensemble average calculated over the duration of the WPM symbol.

In this paper, the performance of the proposed PAPR reduction scheme is demonstrated through the complementary cumulative distribution function (CCDF) of PAPR. Given the reference level $PAPR_0 > 0$, the probability of a PAPR being higher than the reference value is the CCDF and is expressed as follows :

$$CCDF(PAPR_0)=\Pr\{PAPR>PAPR_0\} \tag{5}$$

For practical reasons, the CCDF of PAPR is calculated based on the percentage of the WPM frames for which PAPR exceeds the threshold $PAPR_0$.

III. PTS FOR PAPR REDUCTION

The block diagram of the PTS is shown in Fig. 2. Wavelet packet modulation data symbols X are used as the input data for the PTS optimization. First, the input data symbol X is partitioned into V disjoint sub-blocks. X is denoted as

$$X=\sum_{v=0}^{V-1}x^{(v)} \tag{6}$$

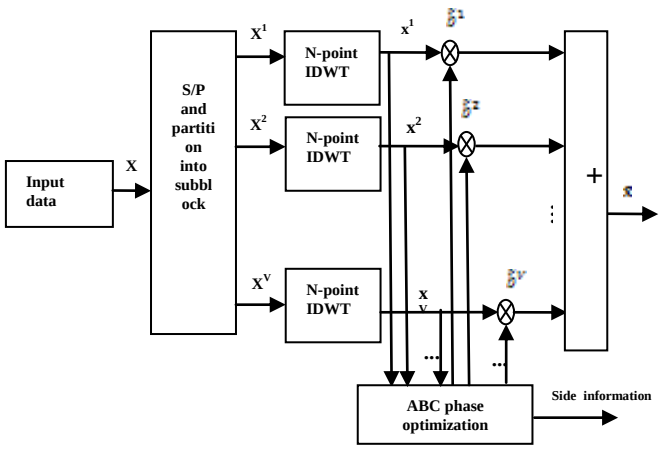

Fig. 2. Block diagram of the PTS model using ABC algorithm.

In order to insert $(L\text{-}1)N$ zeros in the data symbol, oversampling is realized. Then inverse discrete wavelet transform (IDWT) is taken and subblocks are transformed into $x^{(v)}=[x_0^{(v)},x_{01}^{(v)},.....,x_{LN-1}^{(v)}]$, $0\le v\le V-1$. Each subblock is rotated by phase factors $b_v=e^{j\phi}$, where $\phi\in(0,2\pi)$, and finally the subblocks are summed. After the PTS operation, the WPM signal becomes

$$x'(n)=\sum_{v=0}^{V-1} b_v . x^{(v)} \tag{7}$$

In the phase optimization, because the phase factor of the first subblocks is taken as b_0=1, there are W^{V-1} alternative b combinations, where $b = [b_0, b_1, b_2, \ldots, b_{V-1}]$ and W is the number of the phase factors. In sequence b, b_v values are as follows:

$$b_v = \begin{cases} \{\pm 1\} & , \quad if \quad W=2 \\ \{\pm 1, \pm j\} & , \quad if \quad W=4 \end{cases} \tag{8}$$

IV. ABC Algorithm for PTS

The Artificial Bee Colony (ABC) is a recently-proposed optimization algorithm that simulates the foraging behaviour of honeybee colonies [24]-[27]. In the ABC algorithm, the position of a food source represents a possible solution to the optimization problem and the amount of nectar in the food source corresponds to the quality (fitness) of the associated solution. The ABC algorithm consists of three main phases, which are the phases of employed bees, onlooker bees and scout bees. At the first phase, the ABC generates a randomly distributed initial population with employed bees. An employed bee produces a modification of the position (solution) in her memory, depending on the local information (visual information), and tests the nectar amount (fitness value) of the new source. If the new nectar amount is higher than that of the previous source, the bee memorizes the new position and forgets the old one. Otherwise, she keeps the position of the previous source in her memory. After all employed bees complete the search process, they share the nectar information of the food sources and their position information with the onlooker bees.

In the PAPR reduction problem using artificial bee colony algorithm, a food source position equals a phase vector $b_i = [b_{i1}, b_{i2}, ..., b_{i(V-1)}]$, i= 1, 2,…, SN where SN shows the population size. In the algorithm, the employed bees search a new food source within the neighbourhood of the previous source. If the nectar amount of the new source is higher than previous one, the new source is accepted as possible optimum solution. The new food source (the new phase vector) is denoted by

$$b_i' = b_i + \phi_i (b_i - b_k) \tag{9}$$

where b_k is a solution within the neighbourhood of the b_i, Φ_i is a random number in the range [-1,1]. First, in the ABC-PTS, employed bees move to food sources. The nectar amount of the food source determines the quality or fitness of the solution. Each employed bee calculates the fitness value where fit(b_i) represents the PAPR value of the signal and which represents the PAPR value of the signal by

$$fit(b_i) = \begin{cases} \dfrac{1}{1+fit(b_i)} & if \quad fit(b_i) \geq 0 \\ 1+abs(fit(b_i)) & if \quad fit(b_i) < 0 \end{cases} \tag{10}$$

The value of fit(b_i) is desired to be minimum.

In nature, onlooker bees watch the dances of the employed bees and select a food source depending on these dances which point at the rich sources. If a source is richer, the employed bee of this source dances more attractive and this source is more probable to be chosen by onlooker bees. Onlooker bees move to new food sources depending on the knowledge taken from the employed bees. The probability of selecting a food source by an onlooker bee is calculated as

$$p_i = \frac{fit(b_i)}{\sum_{i=1}^{SN} fit(b_i)} \tag{11}$$

In the ABC algorithm for PTS, after the employed bees and the onlooker bees complete their task, the employed bees become the scout bees to search randomly for new food sources with a factor of rand(0,1) by the following formula:

$$b_i = \min(b_i) + rand(0,1) \times (\max(b_i) - \min(b_i)) \tag{12}$$

where min(b_i) and max(b_i) are lower and upper bounds of the phase vector.

The algorithm are repeated within maximum number of cycle (MCN). In a cycle, possible SN solutions are produced. In the PTS algorithm using ABC algorithm, MCN*SN possible solutions are produced to obtain the optimum phase vector.

V. Simulation Results

In the simulations, WPM system has N=256 subcarriers and QAM modulation was used. HPA is used with IBO=0,3,6 dB and p= 0.5, 2. Oversampling factor of the transmitted signal is L=4. In the simulations, the signal is transmitted over AWGN channel. WPM signals are randomly partitioned into V= 16 subblocks. The number of the phase factor is selected as W=2.

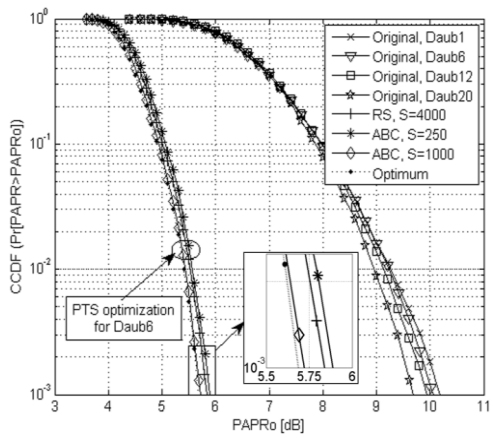

Fig. 3. PAPR comparisons of original wavelet for different Daubechies wavelets, random search, artificial bee colony and optimum PTS.

PAPR comparisons of WPM, random search, artificial bee colony and optimum PTS are given in Fig. 3. Simulation results are given for wavelet packet modulation using 1st, 6th, 12th and 20th Daubechies wavelets. 1st Daubechies wavelet

yields the worst performance while 20th Daubechies wavelet yields the best performance for original wavelet packet modulation. Simulation results of random search PTS for 6th Daubechies wavelets are given for search number S=4000. Simulation results of artificial bee colony algorithm for 6th Daubechies wavelets are given for search numbers 250 and 1000, respectively. It is seen from Fig. 3 that random search PTS, ABC PTS and optimum PTS require roughly 4 dB less PAPR value according to the original wavelet packet modulation when CCDF=10^{-3}. According to the Fig. 3, ABC PTS with search number *S*=1000 requires less PAPR according to random search PTS with search number S=4000. Optimum PTS yields the best performance.

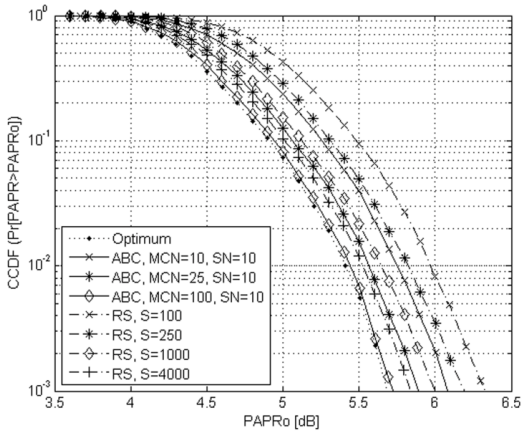

Fig. 4. PAPR comparisons of the ABC-PTS with different MCN, the RS-PTS with different search numbers and the optimum-PTS.

PAPR comparison of ABC-PTS and random search PTS for 6th Daubechies wavelets are given in Fig. 4 for different parameters. Simulation results of ABC PTS are given for the population size SN=10 and different maximum cycle numbers. Simulation results of random search PTS are given for different search numbers. The PAPR values of the ABC PTS decrease when the maximum cycle numbers are increase. The PAPR values of the random search PTS decrease when the search numbers are increase. ABC PTS with MCN=100 yields better performance according to random search PTS with S=4000.

VI. Conclusion

In this paper, PAPR reduction using artificial bee colony (ABC) algorithm for PTS is proposed for wavelet packet modulation. The performance of the artificial bee colony algorithm for 6th Daubechies wavelets was compared with the original WPM for different Daubechies wavelets, random search PTS for 6th Daubechies wavelets and optimum PTS by computer simulations. According to the simulation results, ABC algorithm for PTS yields better performance than random search PTS. ABC algorithm for PTS also yields near performance to the optimum PTS.

References

[1] A. R. Lindsey and J. C. Dill, "Wavelet packet modulation:A generalized method for orthogonally multiplexed communications," in *Proc.of the 27th Southeastern Symp. on System Theory*, 1995, pp. 392-396.

[2] H. Nikookar and M. K. Lakshmanan, "Comparison of sensitivity of OFDM and wavelet packet modulation to time synchronization error," in *Proc. of the 19th IEEE Int. Symp. on Personal, Indoor and Mobile Radio Communications*, 2008, pp. 1-6.

[3] T. Xianghong, Z. Ling , and L. Shuangxia, "Study on the identification method of wavelet packet modulation signals," in *Proc. of the 5th Int. Conf. on Wireless Communications, Networking and Mobile Computing*, 2009, pp. 1-4.

[4] A. R. Lindsey, "Wavelet packet modulation for orthogonally multiplexed communication," *IEEE Trans. on Signal Processing*, vol. 45, pp. 1336-1339, May 1997.

[5] T. Jiang and Y. Wu, "An overview: Peak-to-average power ratio reduction techniques for OFDM signals," *IEEE Trans. on Broadcasting*, vol. 54, pp. 257-268, June 2008.

[6] K. Kang, S. Kim, D. Ahn, and H. J. Lee, "Efficient PAPR reduction scheme for satellite MC-CDMA systems," *IEE Proc.-Commun.*, vol.152, pp. 697–703, 2005.

[7] J. Armstrong, "Peak-to-average power reduction for OFDM by repeated clipping and frequency domain filtering," *Electron. Letters*, vol. 38, pp. 246–247, 2002.

[8] E. Jones, T. A. Wilkinson, and S. K. Barton, "Block coding scheme for reduction of peak to mean envelope power ratio of multicarrier transmission scheme," *Electron. Lett.*, vol. 30, pp. 2098–2099, 1994.

[9] B. S. Krongold and D. L. Jones, "PAR reduction in OFDM via active constellation extension," *IEEE Trans. Broadcast.*, vol. 49, pp. 258–268, 2003.

[10] G. R. Hill, M. Faulkner, and J. Singh, "Reducing the peak-to-average power ratio in OFDM by cyclically shifting partial transmit sequences," *Electron. Lett.*, vol. 36, pp. 560–561, 2000.

[11] P. V. Etvelt, G. Wade, and M. Tomlinson, "Peak to average power reduction for OFDM schemes by selective scrambling," *Electron. Lett.*, vol. 32, pp. 1963–1964, 1996.

[12] D. S. Jayalath and C. Tellambura, "Reducing the peak-to-average power ratio of orthogonal frequency division multiplexing signal through bit or symbol interleaving," *Electron. Lett.*, vol. 36, pp. 1161–1163, 2000.

[13] R. W. Bäuml, R. F. H. Fisher, and J. B. Huber, "Reducing the peak-to-average power ratio of multicarrier modulation by selected mapping," *Electron. Lett.*, vol. 32, pp. 2056–2057, 1996.

[14] S. H. Müller and J. B. Huber, "OFDM with reduced peak-to-average power ratio by optimum combining of partial transmit sequences," *Electron. Lett.*, vol. 33, pp. 368–369, 1997.

[15] L. J. Cimini and N. R. Sollenberger, "Peak-to-average power ratio reduction of an OFDM signal using partial transmit sequences," *IEEE Commun. Lett.*, vol. 4, pp. 86–88, 2000.

[16] S. H. Han and J. H. Lee, "PAPR reduction of OFDM signals using a reduced complexity PTS technique," *IEEE Signal Processing Lett.*, vol. 11, pp. 887–890, 2004.

[17] Y. Zhang, Q. Ni, H. H. Chen, and Y. Song, "An intelligent genetic algorithm for PAPR reduction in a multi-carrier CDMA wireless system," in *Proc. Int. Wireless Commun. and Mobile Computing Conf.* , 2008, pp. 1052-1057.

[18] S. K. Ting, C. E. Tan, and R. Sapawi, " Improved simulated annealing algorithm for PAPR reduction in OFDM systems," in *Proc. of Int. Conf. on Computing and Informatics*, 2006, pp. 1-6.

[19] Y. C. Yao, H. L. Hung, and J. H. Wen, "PAPR reduction in OFDM system using differential evolution-based partial transmit sequences scheme," in *Proc. Int. Conf. on Machine Learning and Cybernetics*, 2011, pp. 1414-1419.

[20] A. A. Parandoosh, J. Taghipour, and V. T. Vakili, "A novel particle swarm optimization for PAPR reduction of OFDM systems," in *Proc. Int. Conf. on Control Engineering and Communication Technology*, 2012, pp. 681-684.

[21] N. Taşpınar, A. Kalınlı, and M. Yıldırım, "Partial transmit sequences for PAPR reduction using parallel tabu search algorithm in OFDM systems, " *IEEE Communications Letters*, vol. 15, no. 9, pp. 974-976, September 2011.

[22] N. Taşpınar, D. Karaboğa, M. Yıldırım, and B. Akay, "PAPR reduction using artificial bee colony algorithm in OFDM systems," *Turkish Journal of Electrical Engineering & Computer Sciences*, vol. 19, no. 1, pp. 47-58, 2011.

[23] N. Taşpınar, D. Karaboğa, M. Yıldırım, and B. Akay, "Partial transmit sequences based on artificial bee colony algorithm for PAPR reduction in MC-CDMA systems," *IET Communications*, vol. 5, no. 8, pp. 1155-1162, 2011.

[24] D. Karaboğa, "An idea based on honey bee swarm for numerical optimization," Technical report, Erciyes University, Engineering Faculty, Department of Computer Engineering, 2005.
[25] D. Karaboğa, and B. Bastürk, "A powerful and efficient algorithm for numerical function optimization: artificial bee colony (ABC) algorithm," *Jour. of Global Optimization*, vol. 39, pp. 459–171, 2007.
[26] D. Karaboğa and B. Bastürk, "On the performance of artificial bee colony (ABC) algorithm," *Applied Soft Computing*, vol. 8, pp. 687–697, 2008.
[27] D. Karaboğa and B. Bastürk, "A comparative study of artificial bee colony algorithm," *Applied Mathematics and Computation*, vol. 214, pp. 108–132, 2009.

Necmi Taşpınar was born in Afyonkarahisar, Turkey, on January 2, 1963. He received the B.S. degree in Electronic Engineering from the Erciyes University, Kayseri, Turkey in 1983, the M.S. degree in Electronic and Telecommunications Engineering from the Technical University of Istanbul, Istanbul, Turkey in 1988, and the Ph.D. degree in Electronic Engineering from the Erciyes University, Kayseri, Turkey in 1991. From 1984 to 1992 he was a Research Assistant, during 1992–1996 he was an Assistant Professor, during 1996–2002 he was an associate professor, and since 2002 he has been Full Professor in the Department of Electrical and Electronic Engineering, Engineering Faculty, Erciyes University, Kayseri, Turkey. His research interests include theory and applications of error-control coding, multi-user detection, channel estimation, equalization, synchronization, CDMA and spread-spectrum systems, OFDM systems, MIMO systems and applications of neural networks, fuzzy logic, adaptive neuro-fuzzy inference system and heuristic approaches to communication problems.

Mahmut Yıldırım was born in Kayseri, Turkey, in 1981. He received the B.S. degree in Electronic Engineering from the Erciyes University, Kayseri, Turkey in 2006 and the M.S. degree in Electrical and Electronic Engineering from Erciyes University, Kayseri, Turkey in 2009. He is studing his Ph.D. degree in Electrical and Electronic Engineering in Erciyes University, Kayseri, Turkey since 2009. He is now working as a research assistant in Bozok University, Yozgat, Turkey. His research interests include PAPR reduction using artificial optimization methods in OFDM and MC-CDMA systems.